Clearlight®

- Complete Lifetime Warranty*
- Free Delivery to Major Centres
- Installation Service Available
- Payment Options Available

5 Person Clearlight® Sanctuary Outdoor Sauna | OD5

FULL SPECTRUM INFRARED SAUNA

True Wave Carbon/Ceramic Far-infrared Heaters
True Wave II™ Full-spectrum Heaters
Low EMF / ELF
Smart Phone App Control
Built in Charging & Bluetooth Audio
Integrated Chromotherapy Included
Reversible Ergonomic Seating
LED Accent Lighting
Eco-certified cedar wood cabin (interior)
Engineered wood (exterior)
Outdoor cover included

Built-in Charging & Audio Station
Bluetooth and AUX inputs allow you to listen to your audio devices.

Chromotherapy Included
Comes with medical grade Chromotherapy as standard

Smart Phone App Control
Log in from your tablet or smartphone and remotely operate your sauna.

Accent Lights
Energy efficient LED lights provide gentle ambient lighting.

Ergonomic Recliner bench
Experience the ultimate in comfort with our exclusive recliner or flat bench

Waterproof Outdoor Cover
Includes a complementary cover for protection against rain and snow.

Features

True Wave II™ Full-spectrum Heaters
Exclusively utilising patent-pending True Wave™ far-infrared and True Wave II™ full spectrum heaters. An innovative fusion of both carbon and ceramic heaters in one, providing you optimal, efficient, and safe therapeutic heat.

True Wave™ Far-infrared Heaters
Our True Wave™ hybrid carbon and ceramic, low EMF and low ELF heaters surround you in therepeutic infrared heat.

360˚ Infrared Heat
Our saunas have heaters on the front wall, back wall, side walls and underneath the bench, heating your body from every direction, which targets your core, rather than just heating the sauna cabin air.

Chromotherapy Upgrade Included
Medical-grade Chromotherapy is included. Chromotherapy utilises coloured light wavelengths that therapeutically benefit mood, energy and cellular activity.

Ergonomically Designed
The chiropractor-designed backrest and reversible bench ensures utimate comfort for long periods of relaxation. The seat is double-sided, with a contoured profile on one side, and flat on the reverse.

Built for the Outdoors
Featuring Gray Cedartec® exterior finish for durable outdoor use, insulated walls and Western Red Canadian Cedar interior for a premium sauna experience.

Clearlight®

5 Person Clearlight® Sanctuary Outdoor Sauna | OD5

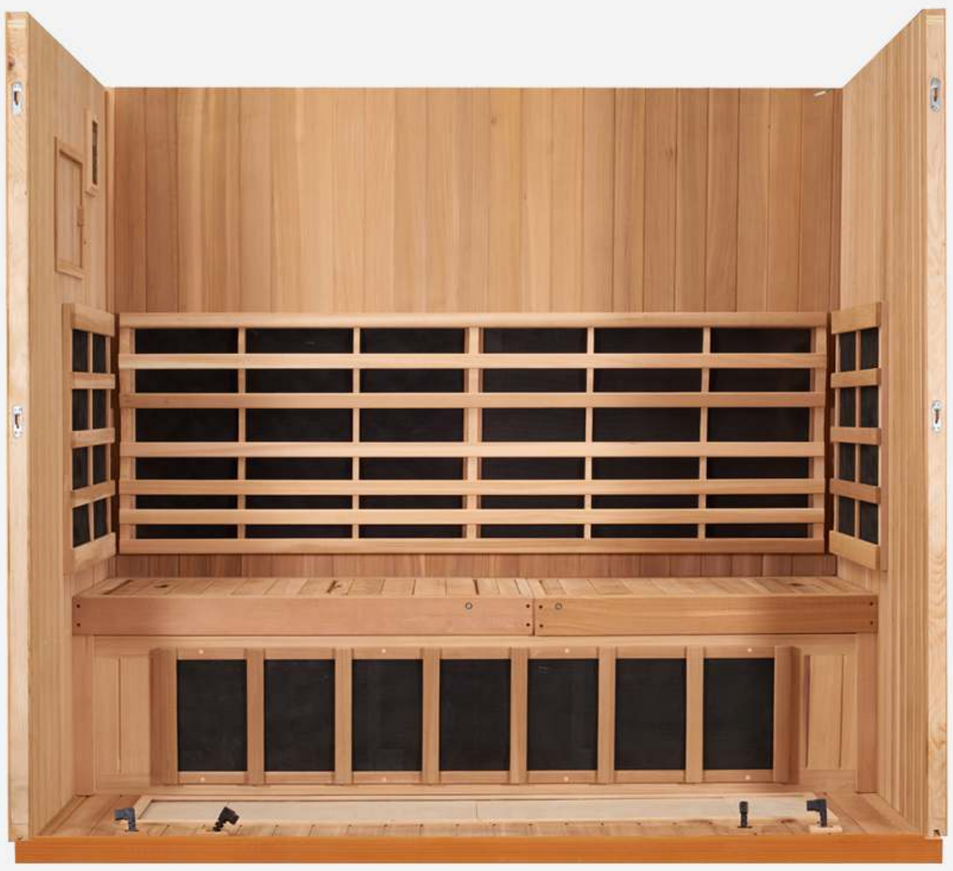

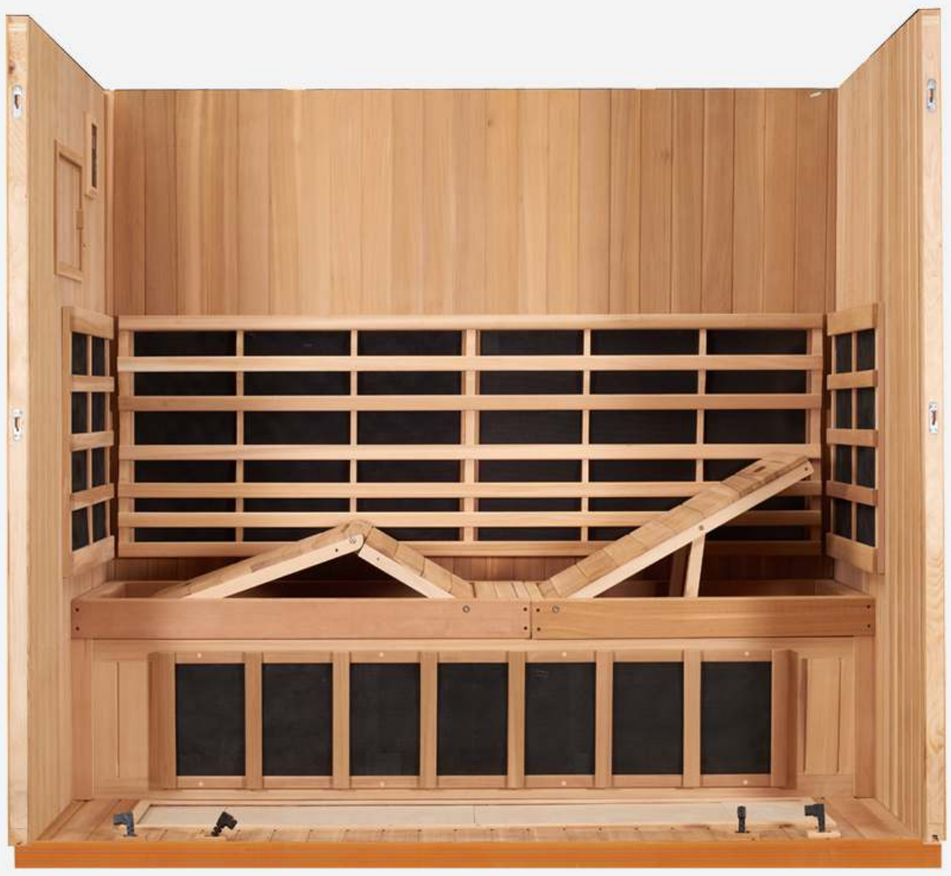

Clearlight®

5 Person Clearlight® Sanctuary Outdoor Sauna | OD5

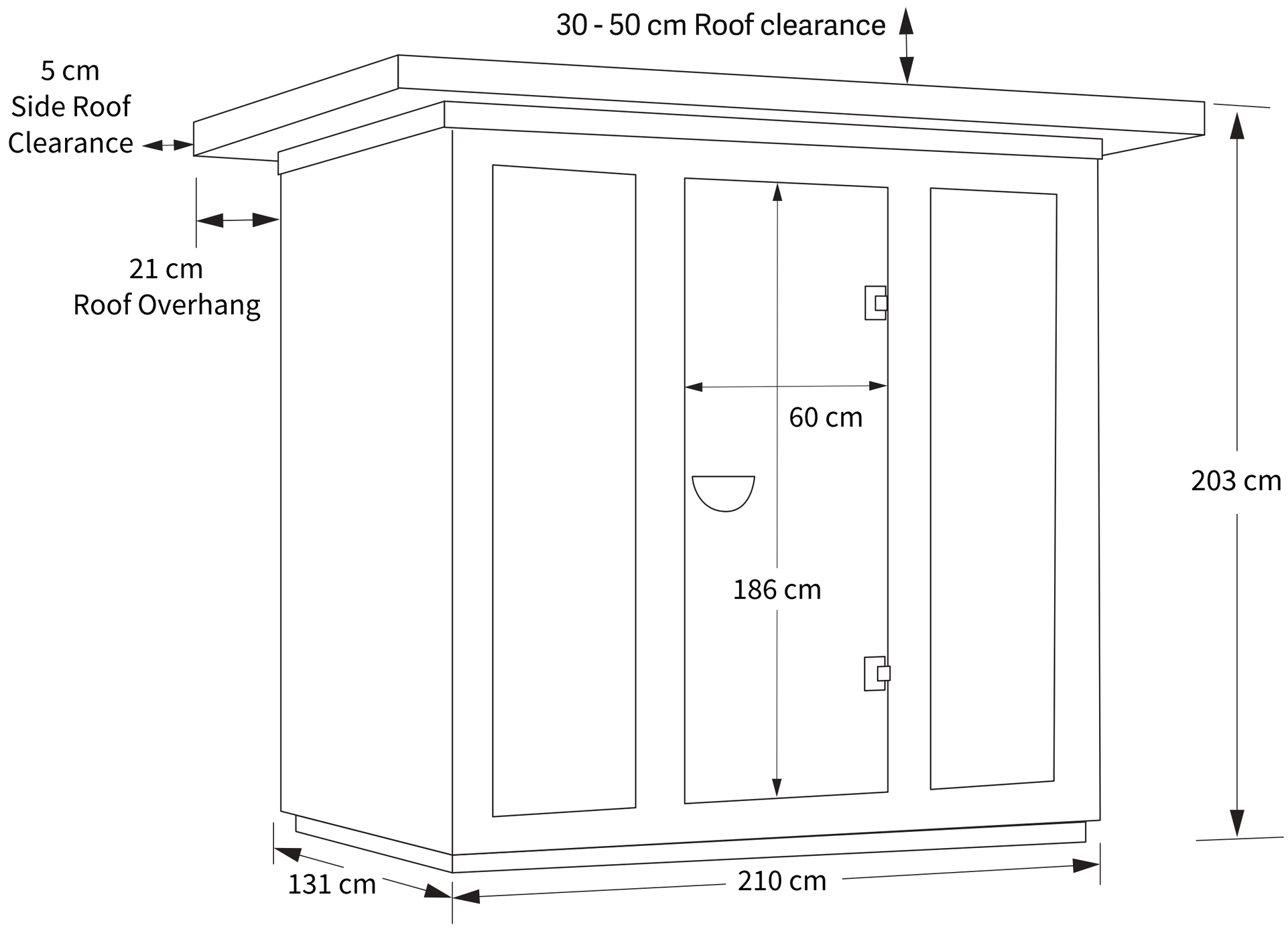

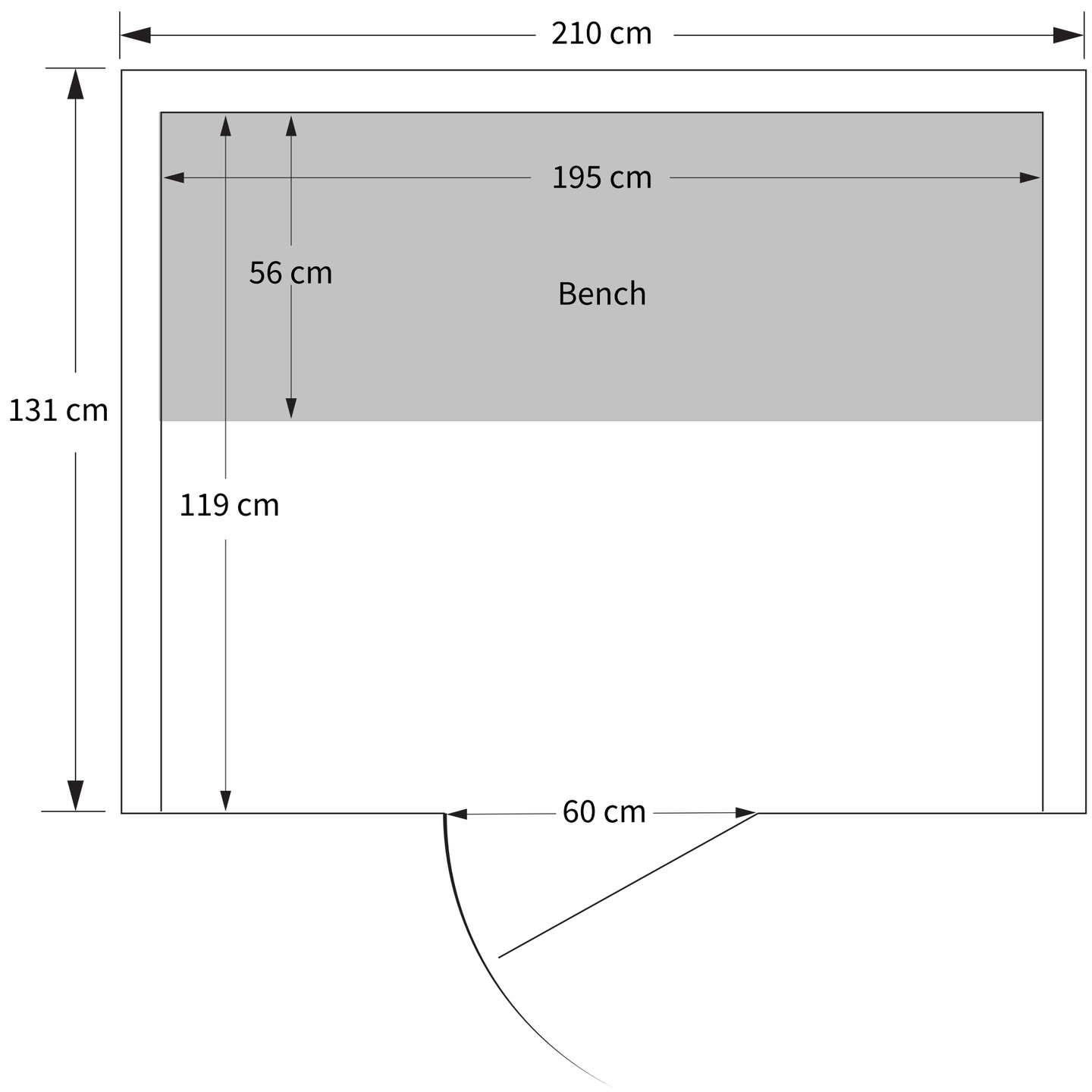

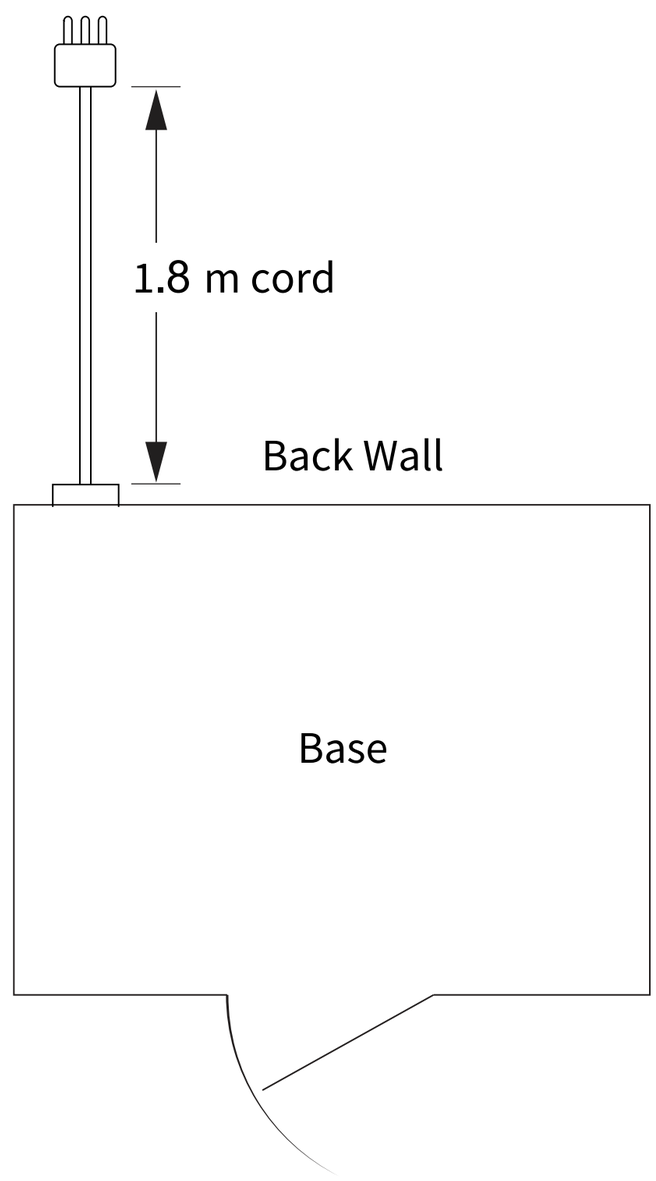

Clearlight®

5 Person Clearlight® Sanctuary Outdoor Sauna | OD5

Specifications | OD5

Dimensions & Weight

INTERIOR		EXTERIOR		WEIGHT
Width	195 cm	Width	210 cm	476 kg
Depth	119 cm	Depth	131 cm	
Height	179cm	Height	203 cm	
Bench	185 x 56 cm		Add 21cm for overhang	

Installation Requirements

For potential access to the electrics in the roof, allow a minimum 50cm clearance on each side and above the roof of your sauna. Please also remember that you have to access the front of the sauna to get in.

Ensure easy access to the powerpoint at all times, to allow for hard reset. We recommend installing the powerpoint at the back left of the sauna (when facing it).

Note: it is possible to install your sauna in smaller spaces, however this may impede access for repairs and maintenance. Your sauna warranty does not cover costs related to gaining access for repairs. Please consult the Clearlight team if you have any specific questions re space allowance.

Heaters

True Wave™Far Infrared and Full Spectrum Infrared Heater.

Power & Electrical Specs

230 V
3,800 W
17.3 A
The sauna requires a 20A power outlet
Outdoor, waterproof plug socket required

Design

Eco Certified Grade "A" Hypoallergenic Western Red Cedar
Zero volotile organic componds
6mm tempered safety glass door, window and ceiling
Double wall tongue and groove construction

Waterproof Rating

IPX 4

Warranty

Interior Components : Lifetime Warranty for interior components
Exterior Cabin : 5 Years

For this warranty to be valid the following condition must be met:
Your Jacuzzi® Outdoor Sauna is protected at all times by a Jacuzzi® Waterproof Sauna Cover.

Waterproof Sauna Cover : 1 Year

Clearlight®

5 Person Clearlight® Sanctuary Outdoor Sauna | OD5

Recommendations for the Outdoor Sauna

Choosing The Right Location

The Outdoor Sauna is defined as "outdoor" because the walls are thermally insulated and therefore have thicker walls, for colder climates.

While the Sanctuary Outdoor saunas are designed to be placed outdoors, we highly recommend choosing a location without excessive exposure to rain, or that is prone to flooding. The Outdoor Saunas is splash resistant, but not weatherproof.

Please note: By International Standards, the Outdoor Sauna has an IPX WATERPROOF RATING of 4 : "Protected from splashing water from any angle".

Recommended Surfaces

The Sanctuary Outdoor Saunas must be installed on a firm surface that can support the weight, (with or without people in it).

A deck is the ideal surface, as the gaps between the decking slats allow for any moisture to escape, should any rain hit the surface of the deck.

Similarly, if placing the Outdoor Sauna onto a concrete slab, please make sure there is sufficient drainage to ensure any moisture drains away from under the floor.

DO NOT position the sauna directly onto grass or any other soft surface where the sauna can settle, and compromise the integrity of the structure.

Installation Requirements

For potential access to the electrics in the roof, allow a minimum 50cm clearance on each side and above the roof of your sauna. Please also remember that you have to access the front of the sauna to get in.

Ensure easy access to the powerpoint at all times, to allow for hard reset. We recommend installing the powerpoint at the back left of the sauna (when facing it).

Note: it is possible to install your sauna in smaller spaces, however this may impede access for repairs and maintenance. Your sauna warranty does not cover costs related to gaining access for repairs. Please consult the Clearlight team if you have any specific questions re space allowance.

Protection Of The Outdoor Sauna

A sauna cover will be provided free of charge upon every outdoor sauna purchase and the use of the sauna cover is mandatory for all the outdoor saunas to maintain the warranty. For the warranty to be valid, the following condition must be met:

Your Jacuzzi® / Clearlight® Outdoor Sauna is protected at all times by a selected Jacuzzi® / Clearlight® Waterproof Sauna Cover or Clearlight Infrared® Waterproof Sauna Cover.

If you choose to not use the provided Outdoor cover, your sauna must be housed in a weatherproof structure.

Drainage Requirements

The sauna must not be placed on any surface that allows for moisture to collect underneath. Select a surface that allows water to drain away to avoid moisture building up and "wicking" up into the sauna from underneath the flooring.

The Outdoor Sauna Roof

The roof cap system is designed to allow water to run off the back of the roof. If the roof is not placed correctly, the water will pool on the roof and may cause damage to the sauna.

The Anchoring Kit

Your sauna comes with an anchoring kit that gives added protection for the sauna roof in extremely windy weather conditions.

Your Safety Matters To Us

The 5-person Outdoor Sauna has a combined weight of 476kg and 2-person Outdoor Sauna has a combined weight of 350kg.
Therefore, as a safety precaution, 3-4 persons may be required for lifting, holding and general installation.

Australia
1800 957 150
info@infrared-saunas.com.au
www.infrared-sauna.com.au

NZ
0800 437 213
info@infrared-saunas.co.nz
www.infrared-sauna.co.nz

Copyright © 2022 Clearlight Saunas Australia Pty. All rights reserved.